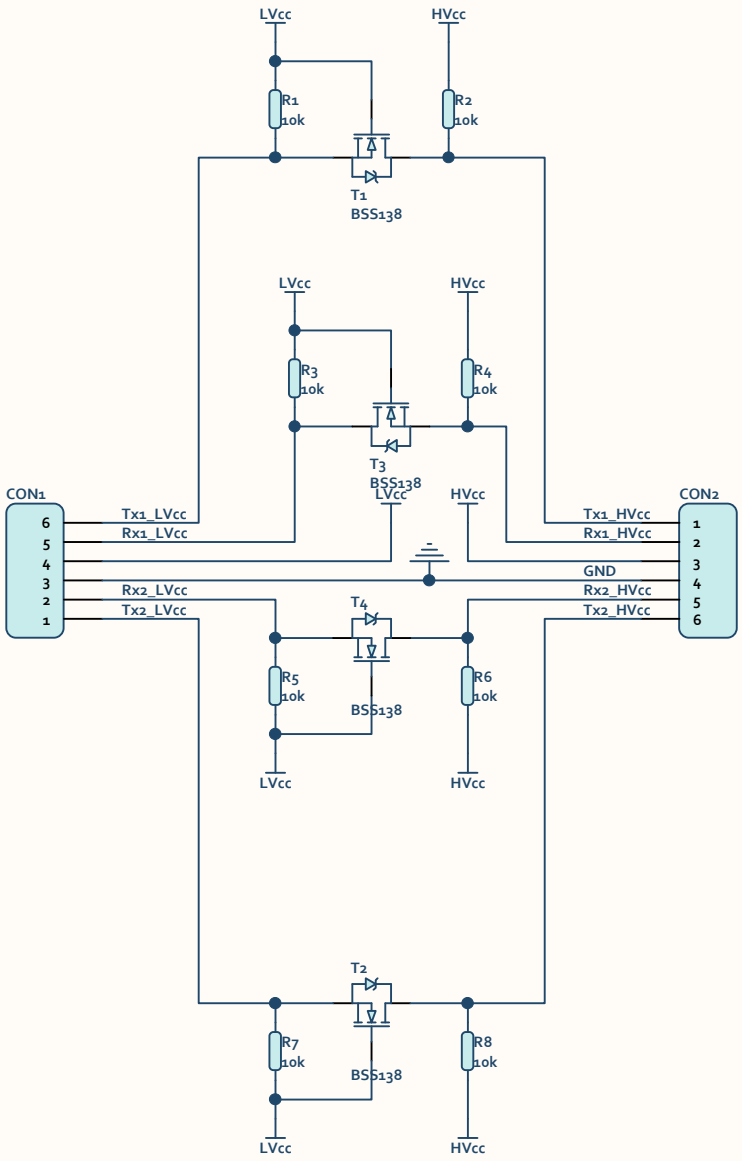

msx-elektronika.pl

Logic Level Converter 4-Channel